EFV MRS Series

Manual Reset Adjustable Excess Flow Valve

BOISWOOD
GAS AND LIQUID CONTROL TECHNOLOGIES

Pressure & Vacuum
Flow
Level & Temperature
Tube & Fittings
HVACR
Custom Services

Key Features

Controls excessive flows.

Features

- Field Adjustable
- Manual Reset
- Materials: 316SS
- Detects Excess Flows
- Function: Shuts Off Flow
- Output: Switch Contact (Optional)

Applications

- Plant Lines
- Regulator Failure
- Fitting Failure
- Toxic Gases & Liquids
- Gas Distribution Systems
- Gas Analyzers
- Loss Controls

Patent No's
4,858,647
4,905,844
5,033,311
Others may apply.

Operation

Flow enters the unit and makes a right angle to the outlet port across the nose of a magnetic piston. The piston is held in place by attraction to an adjusting screw magnet. A pressure differential is created by flow across the piston. When the differential is great enough, the piston slides to a seat at the outlet port. The flow rate at which the piston actuates can be changed externally by turning the adjusting screw, thereby changing the piston's relationship with the flow stream. In this auto reset model after actuation, the piston rests on a metal to metal seat which allows a controlled bleed. To reset the unit, pressure must be equalized on both sides of the piston. If the source is turned off, either upstream or downstream, the bleed will equalize the pressure and the valve will automatically reopen by magnetic repulsion from the fixed magnet located in the valve body.

For positive shut-off an elastomer is used on the nose of the piston. When it comes to rest on the seat it provides a bubble tight closure. To reopen the valve there are two options.

1. The upstream pipeline must be bled to atmosphere if the line downstream is at atmosphere.
2. A by-pass line with an on/off valve must be installed to port the upstream pressure to the down-stream pipeline to equalize the pressure.

Our MRS series is available with the by-pass system as an integral part of the unit.

- Actuation points for air at 68°F and 14.7 PSIA.

Correction must be made for other fluids, line pressure and temperatures. Please consult your representative or the factory.

Temperature Operating Range

- AMBIENT: 0° to 125°F (-18° to 52° C)
- MEDIA: 0° to 180°F (-18° to 82° C)

CE

Calibration Range

Model	Adjustable Range Air SLPM (SCFM)	Adjustable Range Water LPM (GPM)	PORT FNPT
EFV-125	0.5 to 155.7 (0.018 to 5.5)	0.015 to 4.5 (0.004 to 1.2)	1/8"
EFV-250	4 to 1132 (0.14 to 40)	0.100 to 15.1 (0.026 to 4.0)	1/4"
EFV-375	85 to 1840 (3.0 to 65)	0.380 to 15.1 (0.100 to 4.0)	3/8"
EFV-500	142 to 2123 (5.0 to 75)	1.90 to 37.8 (0.50 to 10.0)	1/2"
EFV-750	425 to 3681 (15.0 to130)	3.80 to 75.7 (1.0 to 20.0)	3/4"

Pressure Loss

Model	Air SLPM (SCFM)	Water LPM (GPM)	ΔP to Atmosphere BARD (PSID)
EFV-125	0.50 (0.018) 75 (2.63) 155 (5.5)	0.015 (0. 004) 2.65 (0.70) 4.50 (1.20)	0.08 (1.2) 0.11 (1.6) 0.21 (3.0)
EFV-250	4 (0.14) 500 (17.50) 1132 (39.62)	0.1 (0.26) 5.0 (1.32) 5.1 (3.99)	0.21 (3.0) 0.41 (6.0) 0.83 (12.0)
EFV-375	85 (2.98) 900 (31.50) 1840 (64.40)	0.38 (0.10) 10.0 (2.64) 15.1 (3.99)	0.10 (1.5) 0.28 (4.0) 0.83 (12.0)
EFV-500	142 (4.97) 1000 (35.00) 2123 (74.31)	1.9 (0.50) 25.0 (6.60) 37.8 (9.98)	0.07 (1.0) 0.28 (4.0) 0.48 (7.0)
EFV-750	425 (14.88) 1800 (63.00) 3681 (128.84)	3.8 (1.00) 4.7 (1.24) 75.7 (19.98)	0.14 (2.0) 0.21 (3.0) 0.34 (5.0)

ChemTec.com | info@ChemTec.com | P: 800.222.2177 | F: 954.428.8745 | 3077 S.W. 13th Dr., Deerfield Beach, FL 33442

EFV MRS Series

Manual Reset Adjustable Excess Flow Valve

ES - Options

Switch Data	SPST UL File #E70063	LEADS
Maximum Switching Voltage		
DC (V)	200	
AC (V)	150	
Contact Rating		
DC (W)	50	leads 18 in. min. from body 22 AWG, TFE insulation
DC (VA)	70	
Maximum Switching Current (A)		
DC (A)	1.0	
AC (A)	0.7	

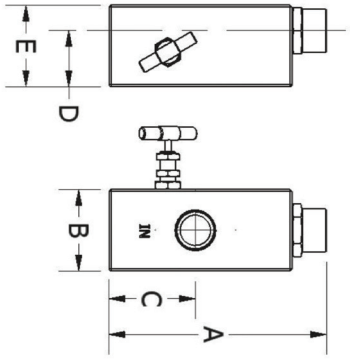

Body Material	Max Working Pressure PSIG (barg)	Wetted Parts	Seals
Brass	1500 (103.42)	Brass, Epoxy, Delrin (Brass Piston in 125 Unit)	Viton®
316SS	3000 (206.84)	316SS, Epoxy	Viton®

Installation

We suggest the unit be calibrated in the attitude in which it will be installed. An actuation point approximately 3 or 4 times the normal Maximum flow rate at the lowest line pressure should be chosen to avoid the valve actuating from initial pressurization of the system and normal surges. If flow is kept constant, an actuation point 10% above the normal rate may be used.

Dimensions

Model	316SS Weight (lbs/gm)	Brass Weight (lbs/gm)	A	B 316SS	B Brass	C	D	E
EFV-125	1.5 (680)	1.6 (726)	2.72 (69)	1.5 (38)	1.5 (38)	0.95 (24)	1.12 (28)	1.62 (41)
EFV-250	3.5 (1588)	3.3 (1497)	3.71 (95)	2 (50)	1.75 (45)	1.5 (38)	1.38 (35)	2 (51)
EFV-375	3.5 (1588)	3.2 (1452)	3.71 (95)	2 (50)	1.75 (45)	1.5 (38)	1.38 (35)	2 (51)
EFV-500	4 (1814)	3.6 (1633)	4.46 (114)	2 (50)	1.75 (45)	1.75 (45)	1.38 (35)	2 (51)
EFV-750	4.8 (2177)	4.4 (1996)	5.35 (136)	2 (50)	1.75 (45)	2.13 (54)	1.38 (35)	2 (51)

How to Order

Sales@ChemTec.com | 800.222.2177

Model	Size	Materials		Manual Reset	Options	
EFV	125 250 375 500 750	B S	Brass 316SS (Other Material available on request)	MRS	ES* O2 HT KZ EPR FP* ESFP	Reed Switch (Not available on 125 models) Oxygen Cleaned High Temperature Unit 340°F (171°C) FFKM Perfluoroelastomer EPR Seals Factory Presetting (State flow rate, medium and line pressure) Required W/ES Option Normally Open Reed Switch Option Requires Factory Presetting

*Consult Factory | Viton® - E.I. Dupont & Co | Teflon® - E.I. Dupont & Co | Kalrez® - E.I. Dupont & Co
All dimensions are subject to change for quality improvement. Not responsible for printing errors.