FS-925 Series – General Purpose

Flow Rate Settings: Liquids: 0.1 GPM to 1.5 GPM
Air/Gases: See Flow Settings at right

UL Approved Explosion-Proof

FS-926 Series – Low Flow

Port Size: 1/4″ NPT
Primary Construction Material: Brass or Stainless Steel
Setting Type: Fixed
Flow Rate Settings: Liquids: 50-300 cc/min.
Air/Gases: See Flow Settings at right

FS-925/926 Series

U.L. Recognized — File No. E31926
CSA Listed — File No. LR30200
FM Approved — File No. 1H3A2.AX and 0A8A3AE

These two series of precision-calibrated switches provides reliable and consistent performance; repeatability is within 1%. FS-925 and FS-926 units are factory preset for actuation at specified flow rates.

These switches provide accurate detection of excessive or insufficient flow rates in such applications as: protecting against loss of fluid flow in hydraulic systems, assuring proper coolant flow in semiconductor processing equipment, monitoring high pressure lubrication systems, and ensuring proper air flow in water/waste systems.

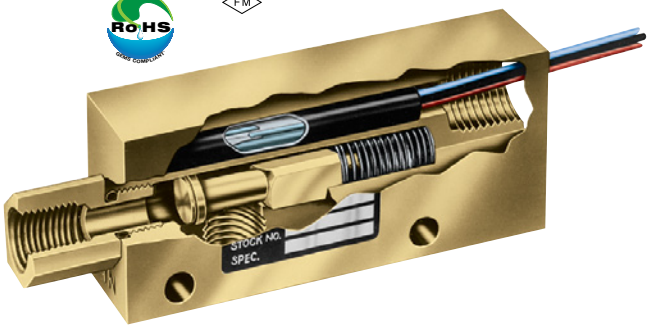

Specifications

Wetted Materials	
Housing	Brass or 316 Stainless Steel
Piston	
In Brass Housing	Polysulfone for water; Brass for oil or air
Stainless Steel Housing	316 Stainless Steel
Low Flow Piston (FS-926)	Same as Housing
Spring	316 Stainless Steel
O-Ring	Viton®
Other Wetted Parts	Epoxy
Pressure Rating	
Operating, Maximum	1000 PSIG (69 bar)
Proof	2500 PSIG (172 bar)
Burst	5000 PSIG (345 bar)
Operating Temperature	
With Brass or S.S. Piston	-20°F to +300°F (-29°C to +148.9°C)
With Polysulfone Piston	-20°F to +225°F (-29°C to +107.2°C)
Repeatability	1% Maximum Deviation
Set Point Accuracy	±10%
Set Point Differential	15% Maximum
Switch*	SPDT, 20 VA
Inlet/Outlet Ports	1/4″ NPT
Electrical Termination	No. 18 AWG, 24″ L., Polymeric Lead Wires

*See "Electrical Data" on Page X-5 for more information.

Both the FS-925 and FS-926 use a spring-loaded piston to detect positive flow with great precision. They act upon direct fluid flow and will not show "false-positive" flow indication as can happen with sensors using indirect sensing methods such as pressure measurement. The FS-926 incorporates an additional lap-fitted piston for very low flows; see below.

Dimensions

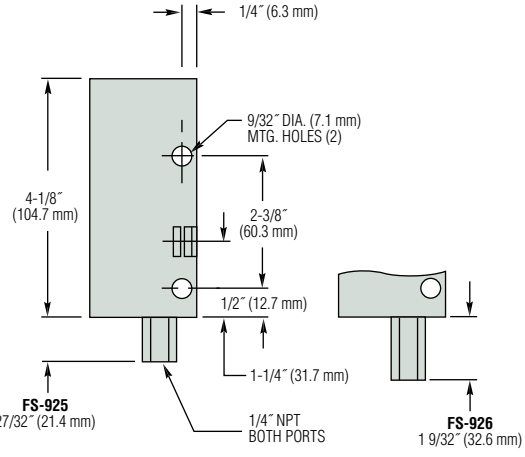

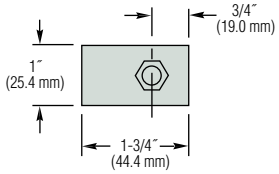

Double Piston Detects Minute Flow – FS-926

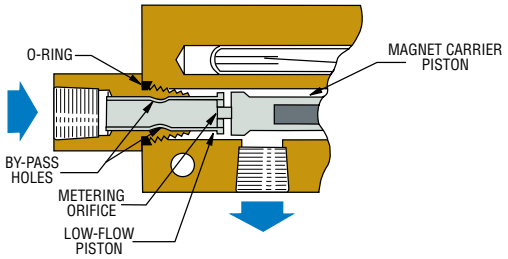

An additional, lap-fitted piston is used in Gems FS-926 Series to accurately detect low-flow rates. Calibration is determined by one or more metering holes in the end of the low-flow piston, which regulate bypass flow, and therefore the actuation setting.

When metered bypass flow is exceeded, the resultant pressure differential displaces the low-flow piston, moving the magnet carrier piston to actuate the reed switch. Two large bypass holes in the piston skirt are exposed after actuation to maintain low pressure drop.

Electrical Connection, 1/2″ NPT Conduit

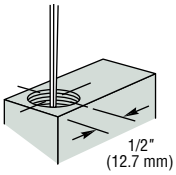

FLOW SWITCHES

Flow Settings, Air (Typical)

Dependent on operating line pressure. Examples of set point ranges at a given line pressure are shown below.

Line Pressure	Actuation Point			
	FS-925		FS-926	
	Min.	Max.	Min.	Max.
5 PSIG (Minimum)	0.5 SCFM	10 SCFM	2 SCFH	15 SCFH
100 PSIG	1.5 SCFM	25 SCFM	7 SCFH	50 SCFH

Minimum 5 PSI line pressure required.

Gas Calibration

Water flow units should not be used for air/gas applications: Gas flow units have a special dash-pot piston for reliable operation. Gas calibration is dependent upon line pressure, switch orientation, and the specific type of gas. The calibrated flow set point is subject to change with fluctuations in line pressure.

How To Order – Standard Models – Water Calibration

Specify Part Number based on desired housing material and flow setting.

Liquids other than water: Special calibration is available from GEMS for media other than water. Please consult factory with your requirements, including housing material (brass or stainless steel), flow media, operating pressure, flow set point and liquid viscosity (SSU). A lot charge will be applied for special calibrations.

Gas flow: Consult factory for available calibrations. Specify: Housing material (brass or stainless steel), gas type, mounting orientation, operating pressure and actuation setting (SCFM or SCFH) and normal flow rate. A lot charge will be applied for special calibrations.

FS-925 Series – General Purpose

Flow Settings GPM, ±10%	Part Numbers	
	Brass	316 S.S.
0.10	**26914** ⚡	**26926** ⚡
0.25	**26915** ⚡	**26927** ⚡
0.50	**26916** ⚡	**26928**
0.75	**26917** ⚡	**26929**
1.00	**26918** ⚡	**26930**
1.50	**26919**	**26931**

FS-926 Series – Low Flow

Flow Setting		Part Numbers	
cc/Min. ±10%	Equiv. GPM	Brass Material	316 S.S. Material
50	.013	**26938**	**26951** ⚡
100	.025	**26939**	**26952**
150	.045	**26941** ⚡	**26953**
200	.055	**26942**	**26954**
250	.065	**26943**	**26955**
300	.075	**26944**	**26956**

Notes:
1. Flow settings are calibrated using water @ +70°F on increasing flow, with units in a vertical position (lead wires up). Consult factory regarding special flow setting calibration.
2. Temperature changes will slightly affect the standard water or gas flow settings listed. Oil flow settings will vary with viscosity.
3. Use of 50 micron filtration is recommended.

⚡ – Stock Items.

Pressure Drop - Typical

FS-925 Series

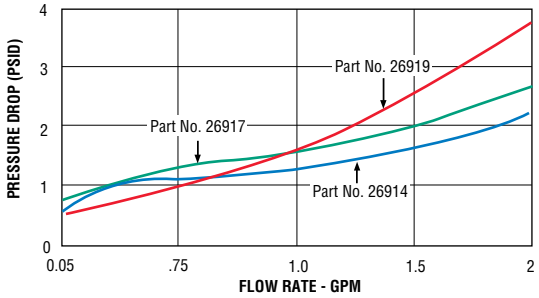

Tests conducted with units in vertical position (lead wires up) with water at +70°F (21°C).

FS-926 Series

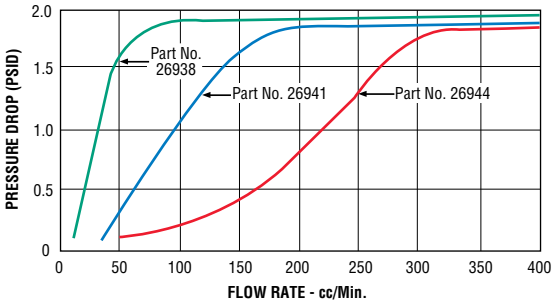

Tests conducted with units in vertical position (lead wires up) with water at +70°F (21°C).

FS-925 and FS-926 switches are U.L. Approved for Class I, Division 2, Groups A, B, C, D hazardous locations.

They are also available with FM-approved, explosion-proof junction box for Class I, Division 1, Group D hazardous locations. Units must be assembled completely at GEMS.
U.L. Approved — File No. E183854

Standard Wiring Color Code

Wire Color	Terminal
Orange	N.O.
Black	Common
Red	N.C.

Visit www.GemsSensors.com for most current information.