Differential Pressure Manifold Valves - EM54

THREE VALVE MANIFOLD: DIRECT MOUNT (DOUBLE FLANGED)

The EM54 is a double flanged instrument manifold that is used to perform the block, equalizing and vent requirements of differential pressure transmitters. For compact, close-coupled installations, the manifold bolts directly to the instrument and can be mated directly to the orifice flange using futbol flanges and short nipples. For remote installation, flange adaptors (futbols) can be used, making the installation similar to the EM53.

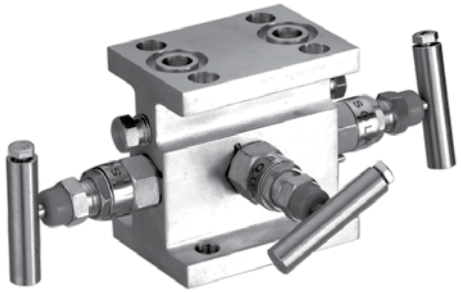

Product Availability

All valves are available with integral hard seats, 316-NACE stainless steel body and trim and Teflon or Graphite packing.

Hastelloy C, Monel models (see order grid) available upon request.

Ratings

Stainless Steel with TFE Packing:
6000 psig @ 100°F (414 bar @ 38°C)
4200 psig @ 400°F (290 bar @ 204°C)

No.	Description	Material	Qty
1	Body	SS316/NACE	1
2	Gland Body	SS316/NACE	3
3	Gland Retainer	SS304	3
4	Gland Seal	PTFE	6
5	Check Nut	SS304	3
6	Spindle	SS316/NACE	3
7	Trim	SS316/NACE	3
8	Handle	SS304	3
9	Washer	SS	3
10	Lock Pin	SS304	3
11	Dust Cap	PVC	3
12	Drain Plug 1/4" NPT	SS316/NACE	3

Note: Other materials and options available

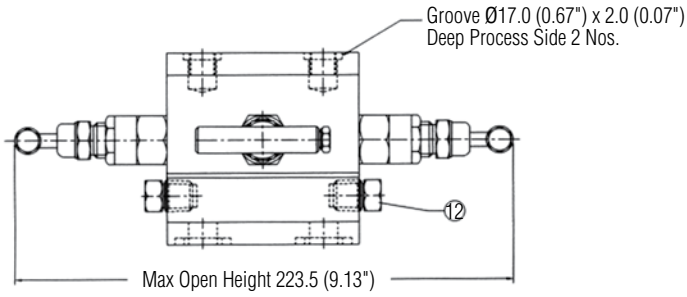

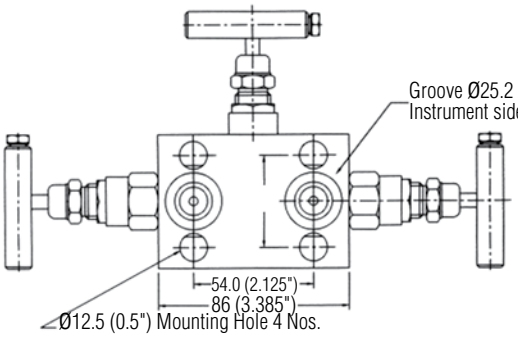

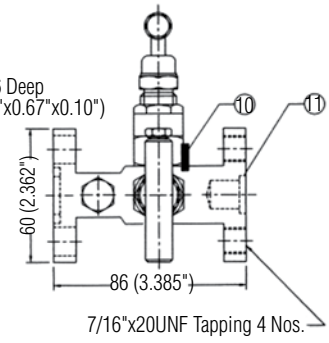

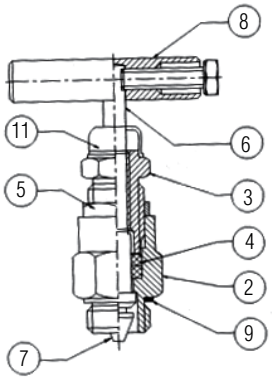

MODEL	BODY CONFIG.	BODY MAT'L	INLET SIZE	INLET TYPE	OUTLET SIZE	OUTLET TYPE	STEM/TIP	SEAT MAT'L	PACKING
EM54	1	D	9	9	9	9	3	1	2

MODEL	TYPE
EM54	Standard

5	BODY
1	Hard Seat

6	BODY MATERIAL
D	316SS-NACE
H	Hastelloy C
M	Monel

7	INLET SIZE
9	Flanged

8	INLET TYPE
9	Flanged

9	OUTLET SIZE
9	Flanged

10	OUTLET TYPE
9	Flanged

11	STEM/TIP
3	316-Nace/316-NACE
B	Monel/Monel
D	Hastelloy C/Hastelloy C

12	SEAT MATERIAL
1	Integral Seat

13	PACKING
2	TFE
3	Graphite
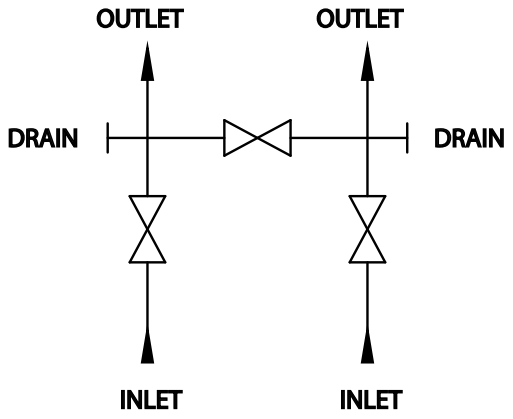
Flow Schematic