M-Zert
Zertifiziertes QM-System
DIN EN ISO 9001
Zertifikat-Nr. 01017

Universal Indicating Unit

for all Inputs
(Frequency, Current, Voltage)

KOBOLD

measuring • monitoring • analysing

ADI-1

Model: ADI-1...S

Model: ADI-1...

Model: ADI-1...R

Option
wall mounting

Option
pipe mounting
bracket

- Panel mounting and field housing
- Bargraph and digital display
- User scaling
- 2 limit values
- Min/max memory
- Protection IP 65
- Simple button programming
- Sensor supply
- Totaliser

KOBOLD companies worldwide:
ARGENTINA, AUSTRIA, BELGIUM, BULGARIA, CANADA, CHILE, CHINA, COLUMBIA, CZECHIA, DOMINICAN REPUBLIC, EGYPT, FRANCE, GERMANY, GREAT BRITAIN, HUNGARY, INDIA, INDONESIA, ITALY, MALAYSIA, MEXICO, NETHERLANDS, PERU, POLAND, ROMANIA, SINGAPORE, SOUTH KOREA, SPAIN, SWITZER-LAND, TAIWAN, THAILAND, TUNISIA, USA, VIETNAM

KOBOLD Messring GmbH
Nordring 22-24
D-65719 Hofheim/Ts.
Head Office:
+49(0)6192 299-0
+49(0)6192 23398
info.de@kobold.com
www.kobold.com

1/03-2012

Description

The KOBOLD indication unit is used for displaying and processing of process values. Frequencies or standard current/voltage signals may be processed as input signals. Most output signals from transducers can thus be displayed. The indication is displayed via a 5 digit display and a 55 point bargraph. All internal process parameters in different configurations can thus be displayed.

All programming is done with 4 front buttons in three different programming modes. 4 internal alarm parameters can be freely assigned to the 2 limit switches, on the optional analogue output, or on the display elements. Using the corresponding totaliser and alarm correlation basic dosing functions can be realised. Various alarm and control functions can be triggered by the digital control input or by pressing a button.

The device has the following functions as standard:

- 4-button programming, user scaling
- MIN/MAX memory, HOLD function
- Sensor linearisation, attenuation function, logic function
- Digital control input, free allocable
- 2 change-over contacts
- Totaliser

Besides the standard functions the device can also be fitted with the following options:

- Analogue output 0(4) - 20 mA, 0 - 10 V_{DC}
- Sensor supply

Technical Details

Bargraph:	arrangement of 55 LEDs: round, 270°, free scaleable, standard: 0 - 100 %
Digital display:	5-digits, 14 mm high red LED display, programmable decimal-point setting
Display range:	-19999 ... +19999
Display time:	0.1-10 s, programmable
Measuring error:	± 0,1 % of measuring range; ± 1 Digit (Norm signal) 0.05 % of measuring range; ± 1 Digit (frequency signal)
Temperature drift:	50 ppm/K
Measurement inputs:	● Norm signals: ("V") -12…+12 V_{DC} at Ri = approx. 200 kΩ -22…+24 mA $_{DC}$ at Ri = approx. 100 Ω 1…24 mA $_{DC}$ at Ri = approx. 100 Ω Pre-calibrated ranges: 0…10 V; 0…20 mA; 4…20 mA or ● frequency input ("F"): 0.01 Hz…99.999 kHz
Sensor supply:	● option "W" 24 V_{DC} ± 10 %, max. 50 mA ● option "V" 12 V_{DC} ± 5 %, max. 20 mA ● option "U" 5 V_{DC} ± 5 %, max. 20 mA
Digital input:	max. 30 V_{DC}, > 10 V HIGH; < 2.4 V LOW, Ri approx. 5 kΩ
Power supply:	● Version "0" 100…240 V_{AC} ± 10 %, 50/60 Hz, max.15 VA 100…240 V_{DC}, max. 15 W ● Version "3" 18…30 V_{AC}, 50/60 Hz, max.15 VA 10…40 V_{DC}, 15 W
Limit values:	2 relay changeover contacts max. 250 V_{AC} / 5 A (resistive load) max. 30 V_{DC} / 5 A
Analogue output: (Option)	0 - 20 mA, 4-20 mA (load < 360 Ω) and 0 - 10 V_{DC}, (load > 10 kΩ)
Output errors:	0.1% of full scale
Storage temperature:	-20 ... +80 °C
Ambiant temperature:	0…+50 °C
Housing material:	Noryl, glass fibre coated
Protection:	front IP 65, terminal IP 00
Connection:	pluggable terminal block cable cross-section 2.5 mm²
Weight:	approx. 700 g

Order Details (Example: **ADI-1 V 0 0 0 20 0**)

Model	Description	Input	Supply (galvanically isolated)	Output	Sensor supply	Contacts	Housing	Special
ADI-1..	Indicating unit 96 x 96 mm with bargraph display, linearisation, min/max memory 2 change-over contacts	**V** = 0-20 mA, 4-20 mA 0-5 V, 0-10 V **F** = Frequency input 0.01-100 kHz	**0** = 100…240 $V_{AC/DC}$ **3** = 18…30 V_{AC} 10…40 V_{DC}	**0** = without **4** = 0(4)-20 mA 0-10V	**0** = without **U** = 5 V_{DC} **V** = 12 V_{DC} **W** = 24 V_{DC}	**2** = 2 change-over contacts	**0** = installation housing	**0** = without **Y** = special (please specify in clear text)

1/03-2012

Description

The KOBOLD indication unit is used for displaying and processing of process values. Frequencies or standard current/voltage signals may be processed as input signals. Most output signals from transducers can thus be displayed. The indication is displayed via a 5 digit display and a 55 point bargraph. All internal process parameters in different configurations can thus be displayed.

All programming is done with 4 front buttons in three different programming modes. 4 internal alarm parameters can be freely assigned to the 2 limit switches, on the optional analogue output, or on the display elements. Using the corresponding totaliser and alarm correlation basic dosing functions can be realised. Various alarm and control functions can be triggered by the digital control input or by pressing a button.

The device has the following functions as standard:

- 4-button programming, user scaling
- MIN/MAX memory, HOLD function
- Sensor linearisation, attenuation function, logic function
- Digital control input, free allocable
- 2 change-over contacts
- Totaliser

Besides the standard functions the device can also be fitted with the following options:

- Analogue output 0(4) - 20 mA, 0 - 10 V_{DC}
- Sensor supply

Technical Details

Bargraph:	arrangement of 55 LEDs: round, 270°, free scaleable, standard: 0 - 100 %
Digital display:	5-digits, 14 mm high red LED display, programmable decimal-point setting
Display range:	-19999 ... +19999
Display time:	0.1-10 s, programmable
Measuring error:	± 0,1 % of measuring range; ± 1 Digit (Norm signal) 0,05 % of measuring range; ± 1 Digit (frequency signal)
Temperature drift:	50 ppm/K
Measurement inputs:	● Norm signals: ("V") -12…+12 V_{DC} at Ri = approx. 200 kΩ -22…+24 mA $_{DC}$ at Ri = approx. 100 Ω 1…24 mA $_{DC}$ at Ri = approx. 100 Ω Pre-calibrated ranges: 0…10 V; 0…20 mA; 4…20 mA or ● frequency input ("F"): 0.01 Hz…99.999 kHz
Sensor supply:	● option "W" 24 V_{DC} ± 10 %, 50 mA max. ● option "V" 12 V_{DC} ± 5 %, 20 mA max. ● option "U" 5 V_{DC} ± 5 %, 20 mA max.
Digital input:	max. 30 V_{DC}, > 10 V HIGH; < 2.4 V LOW, Ri approx. 5 kΩ
Power supply:	● Version "0" 100…240 V_{AC} ± 10 %, 50/60 Hz, max.15 VA 100…240 V_{DC}, max. 15 W ● Version "3" 18…30 V_{AC}, 50/60 Hz, max.15 VA 10…40 V_{DC}, 15 W
Limit values:	2 relay changeover contacts max. 250 V_{AC} / 5 A (resistive load) max. 30 V_{DC} / 5 A
Analogue output: (Option)	0 - 20 mA, 4-20 mA (load < 360 Ω) und 0 - 10 V_{DC}, (load > 10 kΩ)
Output errors:	0,1% of full scale
Storage temperature:	-20 ... +80 °C
Ambiant temperature:	supply ("0"): -20…+60 °C supply ("3"): -20…+80 °C
Housing material:	Aluminum (powder coated), PA 66
Protection:	IP 65
Mounting:	wall and pipe mounting
Connection:	pluggable terminal block (internal) cable glands: PG 13,5
Weight:	approx. 1500 g

Order Details (Example: **ADI-1 V 0 0 0 2 F 0**)

Model	Description	Input	Supply (electr. isolated))	Output	Sensor supply	Contacts	Housing	Special
ADI-1..	Indicating unit with bargraph display, linearisation, min/max memory 2 change-over contacts	**V** = 0-20 mA, 4-20 mA 0-5 V, 0-10 V **F** = Frequency input 0,01-100 kHz	**0** = 100…240 $V_{AC/DC}$ **3** = 18…30 V_{AC} 10…40 V_{DC}	**0** = without **4** = 0(4) - 20 mA 0 - 10V	**0** = without **U** = 5 V_{DC} **V** = 12 V_{DC} **W** = 24 V_{DC}	**2** = 2 change-over contacts	**F** = field housing **S** = field housing with wall mounting; finely rotatable **R** = field housing with pipe mounting; for 2" piping	**0** = without **Y** = special (please specify in clear text)

Dimensions

Field Housing

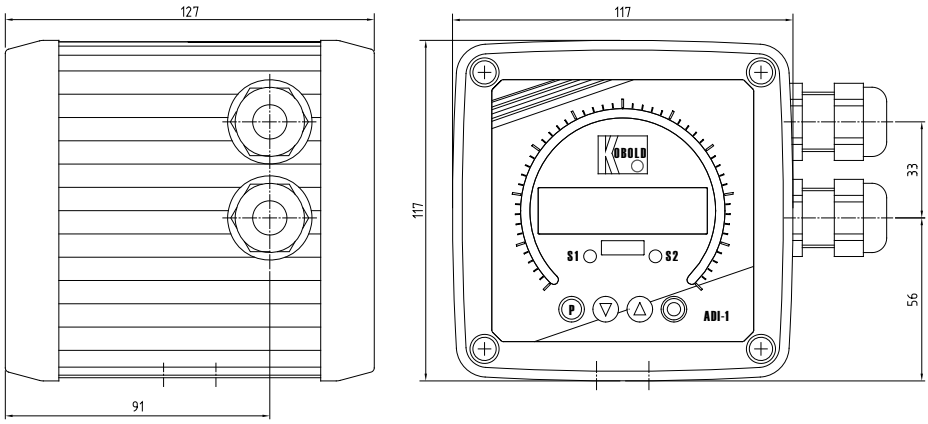

Panel Mounting