McMillan
FLOW PRODUCTS

BOISWOOD
GAS AND LIQUID CONTROL TECHNOLOGIES

Pressure & Vacuum
Flow
Level & Temperature
Tube & Fittings
HVACR
Custom Services

PRECISION FLOW METERS FOR LIQUID APPLICATIONS

10X Series
Microturbine Flow Sensors
Models 106 / 106S / 106F

APPLICATION IDEAS

Analysis sample rate verification
Totalizing chemical injection streams
Test stand flow monitoring
Upgrading rotameters to monitor flow rate

Product Description

McMillan 10X Series Flow Sensors are capable of measuring extremely low flow rates. Units are available that measure liquids as low as 13 mL/minute and as high as 50 L/minute. Full scale accuracies of ±1.0% or better are available on select models.

A wide variety of liquids may be measured. Repeatable results are achieved using a patented Pelton-type microturbine wheel. This proven design has been providing precision results since 1988 and has developed a well-deserved reputation for continuous operational service for many years without failure.

Because of the compact size and economical cost of these products, the 10X Series Flow Sensors are suitable for a wide variety of industrial, commercial, laboratory and O.E.M. applications. Some sample applications include measurement of hydrocarbon fluids, fuels, light oils, solvents, coolant, pesticides, mild acids, alkalis, and deionized water. Several power and output configurations are available, including both pulse and analog outputs. NIST Traceable certificates are available on most models.

Principle of Operation

McMillan's microturbine wheel technology utilizes the Pelton turbine wheel concept. This design allows for use of a miniature turbine wheel. The wheel is supported on a very small sapphire shaft, held in position by two maintenance-free bearings. Due to the light weight of both the wheel and the shaft, the microturbine wheel is virtually suspended in the flow path. This suspension effect relieves force on the shaft and bearings, eliminating wear.

As flow passes through the flow sensor, it is directed onto the very small teeth of the wheel using a precision-machined nozzle. (As shown with blue arrows in Figure 1) This nozzle is sized according to the flow range of the unit. The rotational speed of the turbine wheel increases proportionally to the volumetric flow rate.

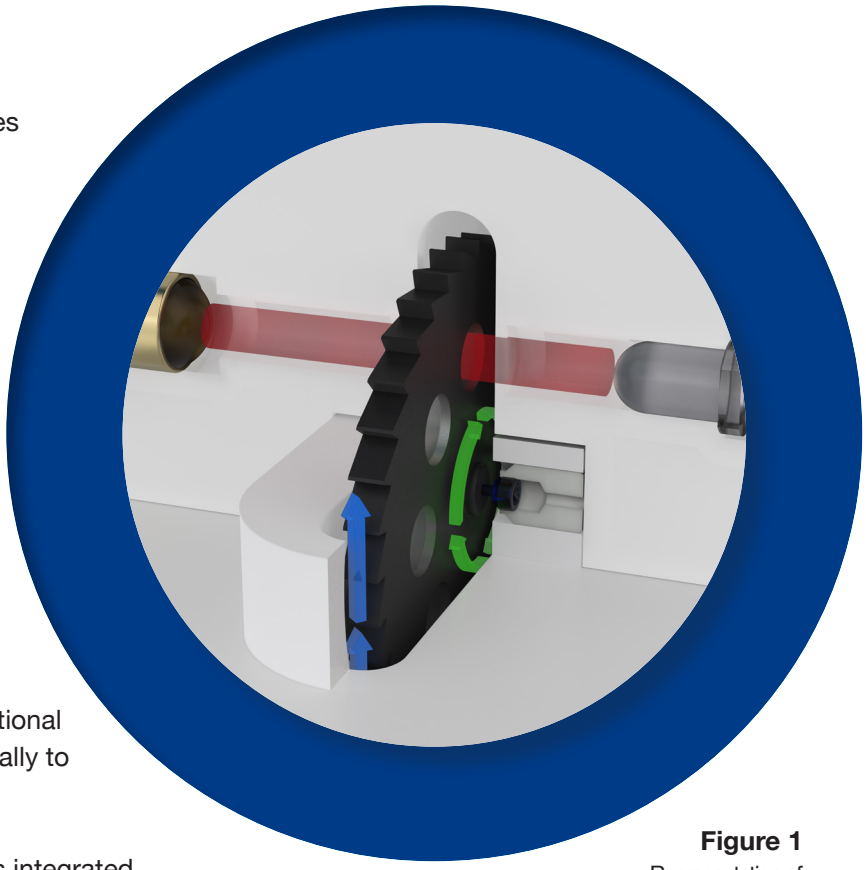

Figure 1
Representation of microturbine technology

The microturbine wheel has translucent sections integrated into the wheel. An infrared emitter (as shown with red in Figure 1) is located on one side of the wheel, and a sensor on the other. As the wheel rotates, (as shown with green arrows in Figure 1) the infrared beam is alternately interrupted and passed through, detecting wheel speed based on flow.

As the wheel spins faster, pulse rate increases. When the wheel stops (under zero flow conditions), no pulses are generated. Consequently, zero drift is not possible and zero adjustments are never required. Processing circuitry provides analog and/or pulse outputs that are linearly proportional to the flow rate.

Features and Options

FLOW RANGES*

Units are available that measure liquids as low as 13 mL/minute and as high as 50 L/minute.

POWER

Most units may be specified to operate with either 12 VDC or 24 VDC power. Various power adapters are also available for use with 12 VDC versions.

SIGNAL OUTPUTS

The Model 106 / 106F / 106S have multiple options available, including, 0-5 VDC, pulse, and 4-20 mA output

ACCURACY/LINEARITY

All liquid models have a standard accuracy specification of ±1% F.S. (including linearity). An improved accuracy specification of ±0.5% is available on some models. NIST traceable calibration certificates are standard for improved accuracy (“H”) models and optional for standard units.

FLUID CONNECTIONS

Units feature either tube fittings or male integrated flare fittings, based on model. Many alternate fitting types and sizes may be selected as noted in the Fitting Codes Chart.

ELECTRICAL CONNECTIONS

Models 106 / 106F / 106S include a circuit board has been epoxy potted for increased chemical resistance and feature an integrated cable with pigtail leads.

WETTED MATERIALS

The wetted materials vary depending on the model number. See the specifications for further details.

DISPLAYS*

A number of remote displays are also available for use with any flow sensor and flow meter.

106

106S

106F

*Contact factory or an authorized representative for additional information.

Specifications

Except where noted all specifications apply to operation at +25°C

Flow Performance & Hardware

	106	106S	106F
Accuracy (including linearity, best fit straight line)	Analog Output: ±1.0% Full Scale Pulse Output: ±3.0% Full Scale		
Repeatability	±0.2% Full Scale		
Pressure Rating	Working Pressure: 60 psig (4 bar) Overpressure Limit: 100 psig (6.8 bar)		
Temperature Rating	Operating Range: 5 to 85ºC Storage Range: 0 to 90ºC		
Temperature Sensitivity	±0.2% F.S. or less per ºC		
Wetted Materials	PTFE Sapphire FKM PFA (Fittings, 106 only)		
Recommended Filtration	25 microns or less		
Compatible Media	Low viscosity (<15 cS), translucent or transparent, degassed		
0-5 VDC Output Signal	Non-isolated, 2500 ohm minimum load		
Pulse Output Signal	7.5VDC peak buffered square wave, 0-400 Hz typical		
4-20 mA Output Signal	Non-isolated, current loop should not exceed 500 ohms		
Power	12 VDC units: 11.5 to 15 VDC @ 55 mA 24 VDC units: 22 to 25 VDC @ 55 mA add 20 mA for 4-20 mA output		22 to 25 VDC @ 65 mA
Response Time	Typically <1 second to 67% of final value		
Certifications	CE Approved; 89/336/EEC (EN 55011 & EN 50082-1) 73/23/EEC Low Voltage Directive UKCA		
Ratings	IP53 (NEMA 2)		
Warranty	1 Year Limited		

Ordering Information

Form part number as follows:

(Base Model) - (Flow Range) (Power/Signal) - (Cable/Connector) - (Fittings) - (Options)

Example: 106F-5A-C6-F4

10_ – ___ ___ – ____ – ____ – ____

OPTIONS

- Y — Epoxy-potted PC Board (106 only)
- FN — Add pair of PVDF flare nuts
- NIST — NIST Certificate (water only) - Contact factory or an authorized representative for calibrations of other media

FITTINGS (SEE FITTING AVAILABILITY CHART BELOW FOR AVAILABLE SIZES BASED ON FLOW RANGE)

- T2 — ⅛" PFA Tube
- T4 — ¼" PFA Tube
- T6 — ⅜" PFA Tube
- F4 — ¼" Flare
- F6 — ⅜" Flare
- F4 — ¼" Integrated PFA Flare
- F6 — ⅜" Integrated PFA Flare
- F7 — ½" Integrated PFA Flare
- F8 — ¾" Integrated PFA Flare

CONNECTOR / CABLE LENGTH

- C3 — Pigtail Leads / 3ft (.92m)
- C6 — Pigtail Leads / 6ft (1.85m)
- C25 — Pigtail Leads / 25ft (7.7m)

POWER / SIGNAL OUTPUT

- A — 12.0-15.0 VDC / Pulse
- B — 22.0-25.0 VDC / 0-5 VDC
- C — 15.0-25.0 VDC / 4-20 mA
- D — 12.5-15.0 VDC / 0-5 VDC
- E — 22.0-25.0 VDC / Pulse
- J — 22.0-25.0 VDC / 0-10 VDC
- K — 12.0-15.0 VDC / 0-10 VDC

FLOW RANGE

- 3 — 13-100 mL/min
- 4 — 20-200 mL/min
- 5 — 50-500 mL/min
- 6 — 100-1000 mL/min
- 7 — 200-2000 mL/min
- 8 — 500-5000 mL/min
- 9 — 1.0-10.0 L/min
- 10 — 2.0-20.0 L/min (106S and 106F only)
- 11 — 5.0-50.0 L/min (106S and 106F only)

MODEL

- 106 — PTFE microturbine flow sensor for liquids
- 106S — PTFE microturbine flow sensor with flare connections for liquids
- 106F — PTFE microturbine flow sensor with flare connections for liquids

FITTING AVAILABILITY

	106					106S/106F			
CODE	T2	T4	T6	F4	F6	F4	F6	F7*	F8
SIZE	1/8'	1/4"	3/8"	1/4"	3/8"	1/4"	3/8"	1/2"	3/4"
MATERIAL	PFA TUBE			FLARE		INTEGRATED PFA FLARE			
RANGE 3	✓	✓	✓	✓		✓	✓		
RANGE 4		✓	✓	✓		✓	✓		
RANGE 5		✓	✓	✓	✓	✓	✓		
RANGE 6		✓	✓	✓	✓	✓	✓		
RANGE 7		✓	✓		✓		✓		
RANGE 8			✓		✓		✓		
RANGE 9			✓		✓		✓	✓	
RANGE 10								✓	✓
RANGE 11									✓

EXAMPLE

106F-5A-C6-F4 would provide a PTFE-bodied microturbine flow sensor that provides a pulse output signal, requires 12 VDC power, includes a 6 foot (1.85 m) cable terminated with pigtail leads, integrates ¼" male flare fluid connections, and would measure flow rates from 50 to 500 mL/minute of water (or similar fluid).

Dimensions

Basic unit configurations shown. Contact factory or an authorized representative for dimensions of units not shown.
All dimensions shown in inches [mm] unless otherwise noted.

106:

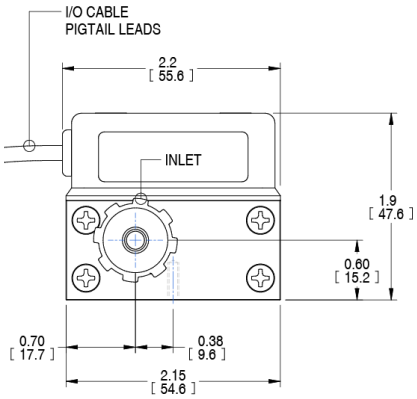

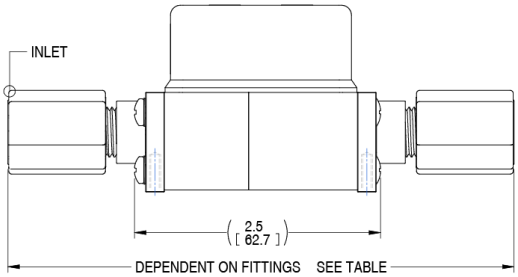

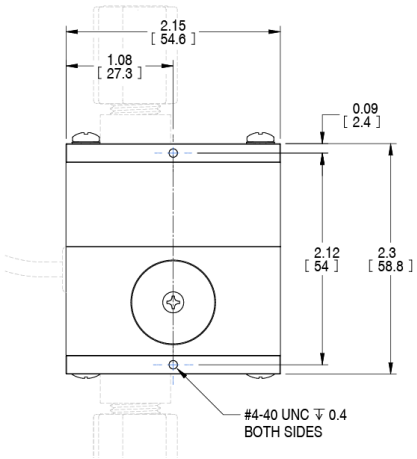

OVERALL LENGTH TABLE					
FITTING	T2	T4	T6	F4	F6
LENGTH	4.8 (121.2)	4.9 (125.2)	5.2 (131.3)	5.0 (127.3)	5.2 (132.3)

106S:

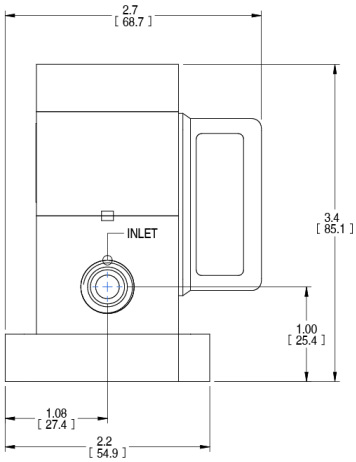

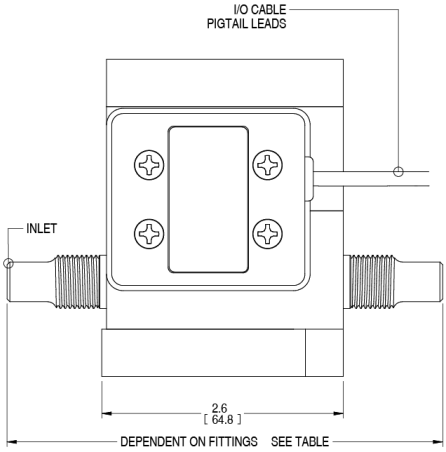

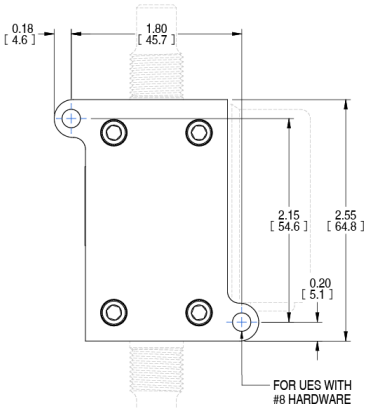

OVERALL LENGTH TABLE				
FITTING	F4	F6	F7	F8
LENGTH	4.6 (121.2)	4.6 (121.2)	4.6 (121.2)	5.1 (129.5)

Dimensions

Basic unit configurations shown. Contact factory or an authorized representative for dimensions of units not shown.
All dimensions shown in inches [mm] unless otherwise noted.

106F:

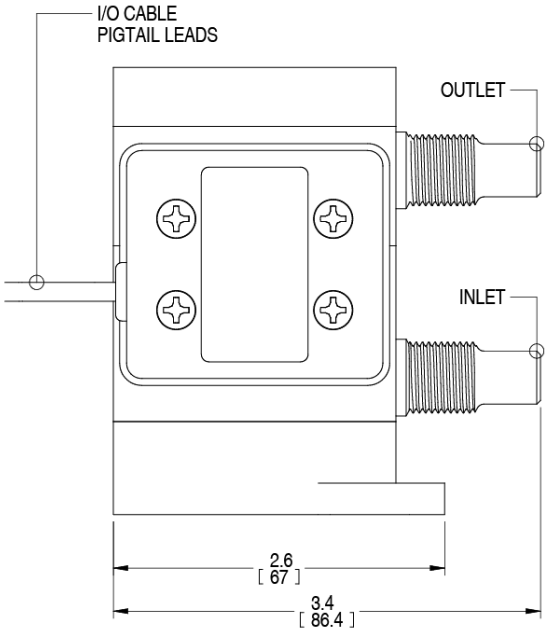

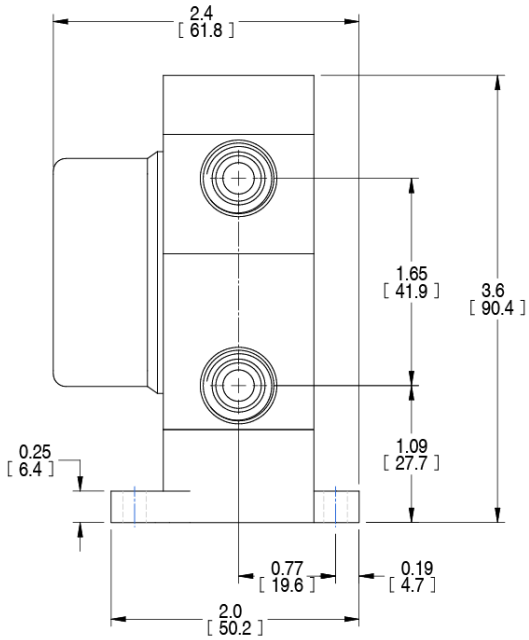

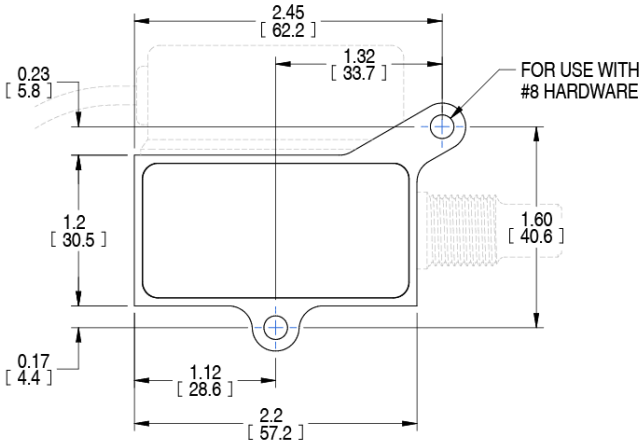

GENERAL DIMENSIONS FOR MODEL 106F F4 AND F6 FITTING OPTIONS ONLY CONTACT FACTORY OR AN AUTHORIZED REPRESENTATIVE FOR F8 OPTIONS

Related Products

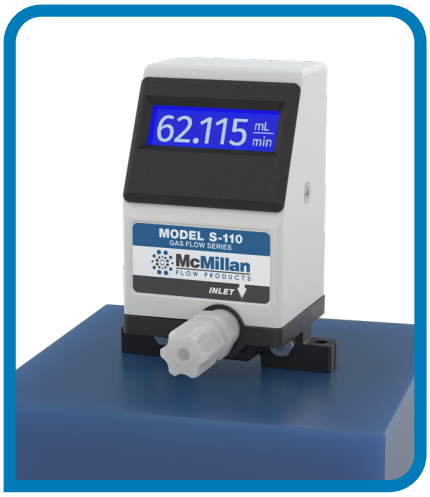

S Series Flow Meters

Flow meters with
integrated flow rate display

Model 250 Display

Multifunction display
for use with the 10X

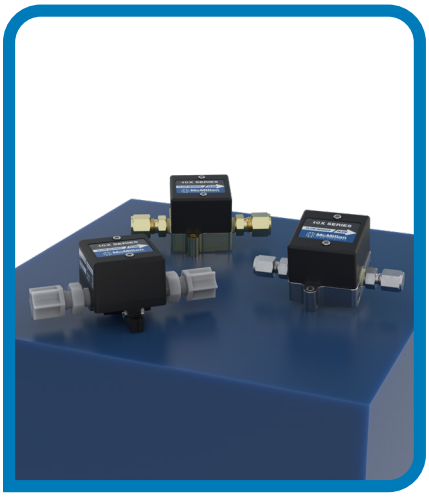

10X Series Flow Meters

Microturbine flow sensors for
liquid applications

McMillan Flow Products
P.O. Box 1340
Georgetown, Texas 78627
Toll-Free: (800) 861-0231 (U.S.A. only)
Direct: +1 (512) 863-0231
Email: sales@mcmflow.com
Website: www.mcmflow.com

Document 106-DSS2307