ZOOK®

RLPS Series
Sanitary Rupture Disks

BOISWOOD
GAS AND LIQUID CONTROL TECHNOLOGIES
Pressure & Vacuum
Flow
Level & Temperature
Tube & Fittings
HVACR
Custom Services

...provide over-pressure protection in sanitary piping system

The RLPS Sanitary Disk is an extension of ZOOK's Reverse Acting Metal Rupture Disk design. Applications include: food processing, dairy, breweries, pharmaceutical, distilling, baking, canning, cosmetics, biotechnology, and petrochemical industries.

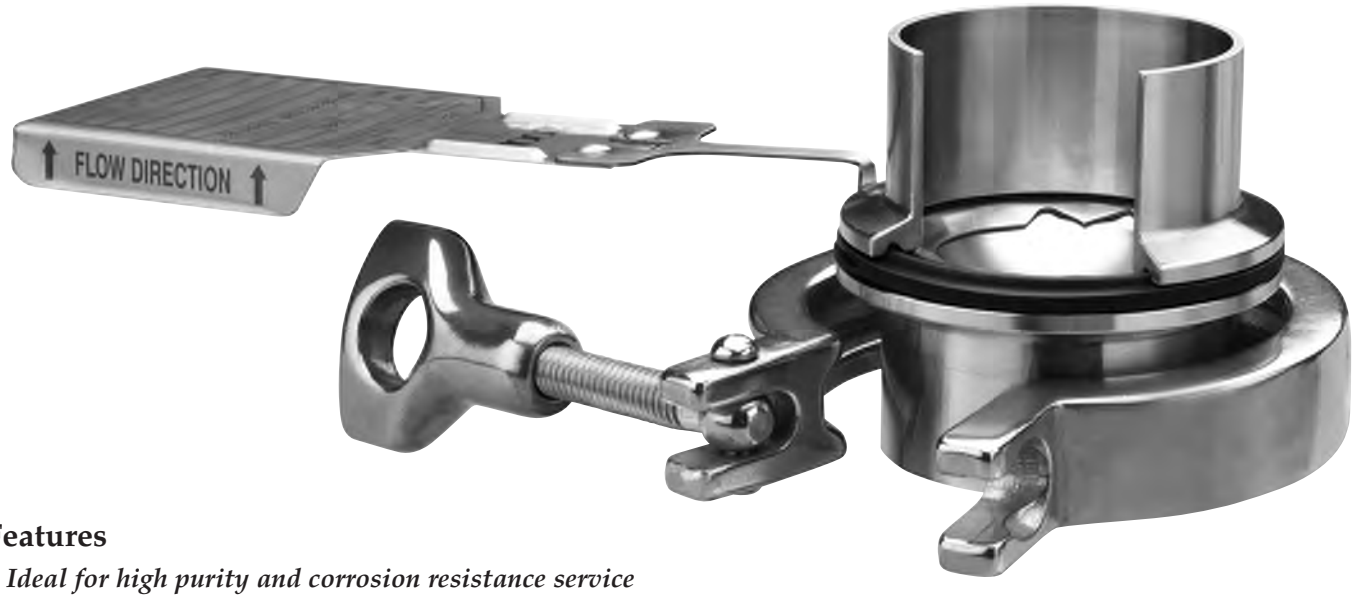

No special components required for installation – mounts using **industry standard** components.

Features

- ***Ideal for high purity and corrosion resistance service***
- Designed for Non-fragmentation
- Rugged, scoreless design offers higher cycle life when compared to scored reverse acting disks
- Excels in liquid, gas, or two-phase applications
- 0% manufacturing range is standard
- Standard operating ratio of 90% of the low end of the burst tolerance – may be extended to 95% of the minimum burst pressure. (Contact ZOOK for operating ratio on pressures below 40 psig)
- Self supporting under full vacuum (with included support ring)
- Resists product buildup. Only the smooth convex side of the disk is exposed to the process medium
- Installs using industry standard Tri-clamp®/Tri-clover® fittings (NA-Connect mounting also available)
- Standard gasket material: Black Buna-N (see chart on reverse page for alternate materials)
- Sizes 1" (25mm) through 4" (100mm)
- CE and TUV compliance available

Optional Features

- TFE liners are available to provide additional protection from corrosive media
- Burst indication (Integral or Ferrule mounted)
- Torque-rite® sanitary clamp nut (eliminates the problems associated with over/under tightening)

Bulletin no. 321300
© 2010 ZOOK Enterprises, LLC, all rights reserved
Printed in U.S.A. 11-10-2500-CGG

RLPS Minimum and Maximum Pressure Ratings

Size in (mm)	Burst Pressure – psig (bar) Minimum 316SS*	Burst Pressure – psig (bar) Minimum w/liner	Burst Pressure – psig (bar) Maximum	MNFA in² (cm2)	Tri-Clover Ferrule Dimensions in (mm) Ferrule OD	Tri-Clover Ferrule Dimensions in (mm) Tube ID
1″ (25)	**11** (0.76)	**16** (1.10)	**83** (5.72)	**0.35** (2.25)	**1.984** (50.4)	**0.856** (21.7)
1-1/2″ (40)	**9** (0.62)	**11** (0.76)	**27** (1.86)	**0.79** (5.09)	**1.984** (50.4)	**1.356** (34.4)
2″ (50)	**7** (0.48)	**11** (0.76)	**24** (1.66)	**1.63** (8.77)	**2.516** (63.9)	**1.856** (47.1)
3″ (80)	**6** (0.41)	**10** (0.69)	**20** (1.38)	**3.86** (24.9)	**3.579** (90.9)	**2.865** (72.5)
4″ (100)	**3** (0.21)	**8** (0.55)	**18** (1.24)	**6.82** (43.99)	**4.682** (118.9)	**3.810** (96.8)

* Alternate sizes, disk materials, gasket materials and lower burst ratings may be available on request
Contact ZOOK for more information.

Note: Maximum disk temperature is dependent on gasket material selected

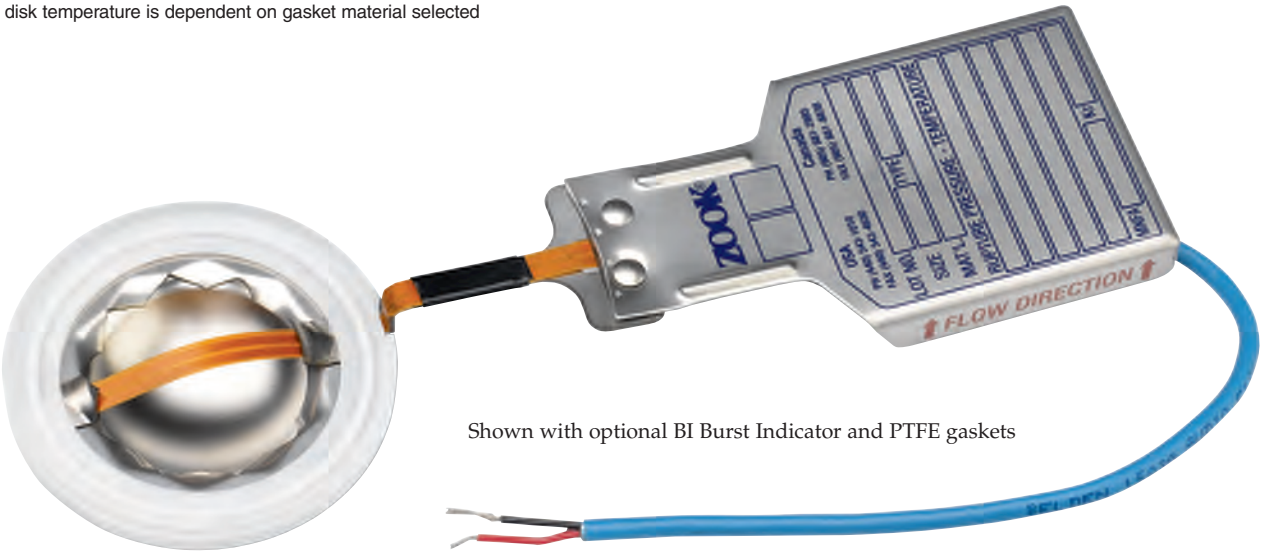

Shown with optional BI Burst Indicator and PTFE gaskets

Gaskets

Material	Max. Temperature
Black Buna-N▲	230F (110C)
White Buna-N	230F (110C)
Black EPDM▲	230F (110C)
Black Viton▲	400F (204C)

▲ – Stocked material

Manufacturing Range / Burst Tolerance

Specified Burst Pressure Rating **psig** (bar)	Available Manufacturing Ranges	Burst Tolerance **psig** (bar)
1 to below 5 (0.07 to below 0.34)	0%, -5%, -10%	**+/-0.50** (+/-0.03)
5 to below 10 (0.34 to below 0.69)	0%, -5%, -10%	**+/-0.80** (+/-0.06)
10 to below 15 (0.69 to below 1.03)	0%, -5%, -10%	**+/-1.30** (+/-0.09)
15 to 40 (1.03 to 2.76)	0%, -5%, -10%	**+/-2.00** (+/-0.14)
Above 40 (Above 2.76)	0%, -5%, -10%	**+/-5%**

Notes:

- 0% manufacturing range might not be available in all materials
- Burst tolerances are the maximum expected variation from the disk's marked burst pressure

Optional Torque-Rite® Nut

Features

- An audible "click"indicating correct torque setting
- Maintains the recommended constant 50in-lb torque
- Retrofits all sanitary clamps, mini through 6"
- No torque wrench or special training required

Tri-clamp/Tri-clover – TM Alfa Laval
Torque-Rite – TM Rubber Fab

UD ASME COMPLIANT
CE PED COMPLIANT

ZOOK Enterprises, LLC
16809 Park Circle Drive
Chagrin Falls, OH 44022 U.S.A.
Toll Free **800.543.1043**
Phone **440.543.1010**
Fax **440.543.4930**
E-mail **sales@zook.cc**

ZOOK Canada, Inc.
4400 South Service Road
Burlington, ON Can. L7L 5R8
Toll Free **800.370.6057**
Phone **905.681.2885**
Fax **905.681.8838**
E-mail **sales.canada@zook.cc**

ZOOK Europe, LTD.
Navigation House, Bridge Street
Killamarsh, Sheffield UK. S21 1AL
Phone **0044 (0) 1909 560999**
Fax **0044 (0) 1909 560860**
E-mail **zookeurope@zook.cc**

visit us on the web at www.zook.cc