M8SI | DIAPHRAGM VALVE

KEY FEATURES & BENEFITS

- 100% Helium Leak Test performed
- Assembling, testing & Packaging in cleanroom: Class ISO 4
- Reverse seat design for high life cycle
- Individual serial number for full traceability
- Electropolished surface roughness per SEMI F19 UHP Grade
- Fluid specific seat material as standard options
- Low internal volume
- 316L VAR® stainless steel double melt per SEMI F20 option available
- Additional Multi-port options
- 270° multiturn handwheel with open/close indicator

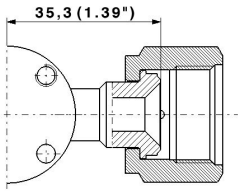

Female (face seal)
Swivel

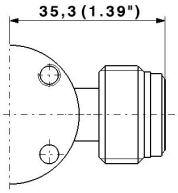

Male (face seal)
non-Swivel

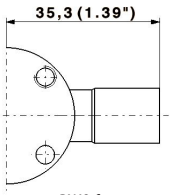

BWO for
micro-welding head

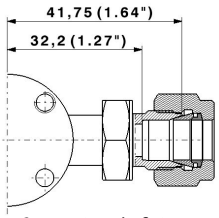

Compression tube fittings

HANDWHEEL COLORS:

Standard: Blue
On demand: Red, black, yellow, green

DIMENSIONS

M8SI - MULTI-TURN VALVE (HM, LM, MSF)

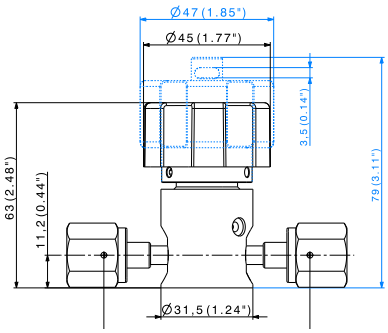

M8SI - PNEUMATIC VALVE HIGH PRESSURE (HPNC, HPNO)

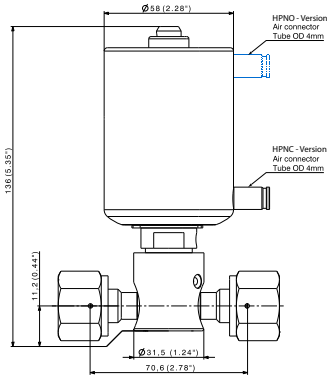

M8SI - PNEUMATIC VALVE (BPNC, BPNO)

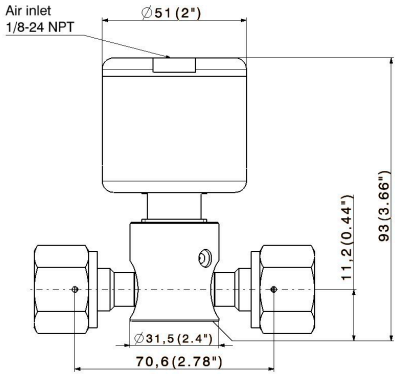

M8SI - QUARTER TURN VALVE (LQ, HQ)

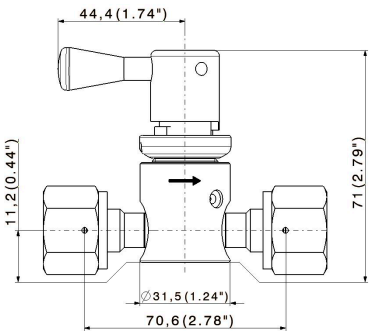

M8SI - BOTTOM VIEW

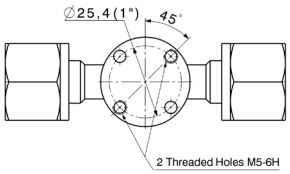

Dimensions are for reference only and are subject to change without notice

SPECIFICATIONS

Max. working pressure	See table below	**Flow capacity (Cv)**	0.5	**Certified max. Helium outboard leak rate**	≤ 1 x 10^{-9} mbar.l/s
Pneumatic actuator opening pressure	5 to 7 bar (73 to 102 psig)	**Nominal seat diameter**	8 mm (0.31")	**Certified max. Helium across the seat leak rate (at max. pressure)**	≤ 1 x 10^{-9} mbar.l/s
Temperature range	See table below	**Wetted volume**	< 1.6 cm^3	**Certified max. Helium inboard leak rate (at max. pressure)**	≤ 1 x 10^{-9} mbar.l/s
		Burst pressure	> 700 bar (10152 psig)		

CONSTRUCTION MATERIAL

	Parts	Material
Wetted parts	Body	SS 316L, VAR
	Seat	PCTFE, PVDF, VESPEL®
	Diaphragm	Phynox®
Non-wetted parts	Backup diaphragm	Phynox®
	Handwheel	Aluminium
	Actuator Body	SS 316L or Aluminium
	Others	Stainless Steel and Alloys

SURFACE FINISH

S	V
Ra 0.4 µm (15 µin)	Ra 0.25 µm EP (10 µin)

TEMPERATURE RANGE

Seat (Actuation type)	Temperature Range
PCTFE / PVDF (manual & pneumatic*)	-40°C to +65°C (-40°F to +149°F)
Vespel® (manual & pneumatic*)	-40°C to +150°C (-40°F to +302°F)

*-20C° pneumatic versions

VALVE VERSION / MAX. WORKING PRESSURE

Valve	Max. working pressure
M8SI (LM) Multiturn handwheel[1 2]	20 bar
M8SI (HM) Multiturn handwheel[1 2]	240 bar
M8SI (LQ) Quarter turn handwheel[1]	20 bar
M8SI (HQ) Quarter turn handwheel[1]	240 bar
M8SI (BP*) Pneumatically actuated	10 bar
M8SI (HP*) Pneumatically actuated	240 bar

[1] FT (Panel Mounting) option available
[2] MSF LOTO option available

MANUAL ACTUATION

Parts for all valve grades	
Upper spindle	Brass
Handle	Aluminium
All others	Stainless Steel

PNEUMATIC ACTUATION

Parts	
Actuator Body	Aluminium / Stainless Steel
Piston	Brass / Aluminium / Stainless Steel
O-ring	NBR
All others	Stainless Steel

All specifications subject to change without notice

PRODUCT CONFIGURATOR

	Surface Finish		Actuation		Porting Configuration	Body Material		Seat Material		End Connection		Options	
M8SI	**S**		**BP***		**2V1**	**I**		**K**		**A/B: B⅜**		**FT**	
	Ra 0.4 µm (15 µin)	**S**	Multi-Turn Handwheel (20bar)	**LM**	See page 26	SS 316L	**I**	PCTFE (Kel-F®)	**K**	Metal face seal ⅜" - Female	**V ⅜ F**	Panel Mounting[1]	**FT**
	Ra 0.25 µm EP (10 µin)	**V**	Multi-Turn Handwheel (240bar)	**HM**		Hastelloy®*	**H**	PI (Vespel®)	**V**	Metal face seal ⅜" - Male non-Swiel	**V ⅜ M**	Electric limit switch*	**CI**
			Pneumatically actuated (10bar)	**BP***		VAR*	**A**	PVDF	**P**	BWO ½"	**B ½**	LOTO[2]	**MSF**
			Quarter-Turn Handwheel (20bar)	**LQ**		*On demand				BWO ⅜" mm	**B ⅜**	Constant bleed	**FPT**
			Quarter-Turn Handwheel (240bar)	**HQ**						BWO 10 mm	**B 10**	*On HP and LP actuators only	
			Pneumatically actuated (240bar)	**HP***						BWO 12 mm	**B 12**		
			*Add NO for normally open or NC for normally closed							Compression tube fittings	**RDB⅜**		
										Compression tube fittings	**RDB½**		
										Compression tube fittings	**RDB 10**		
										Compression tube fittings	**RDB 12**		

Special configuration on demand

VALVES

TOP VIEW

Standard configurations:

2V1

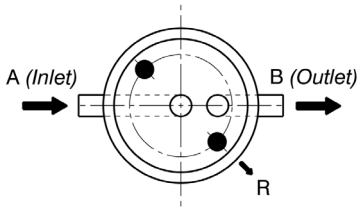

2V2

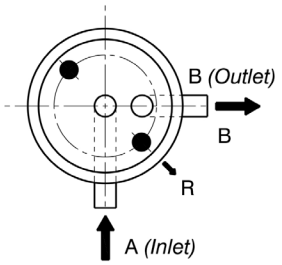

3V4

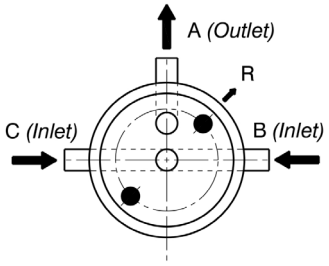

3V5

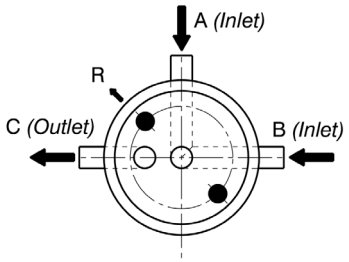

3V6

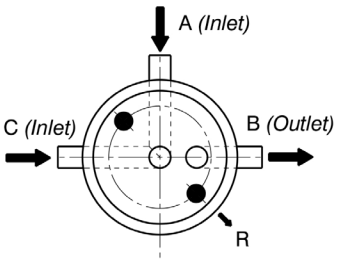

3V8

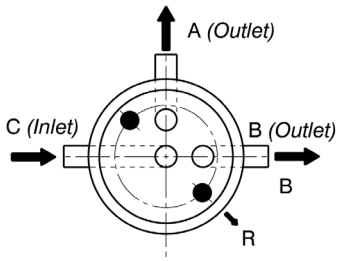

3V9

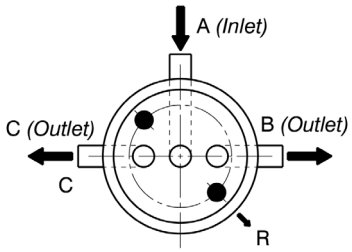

4V10

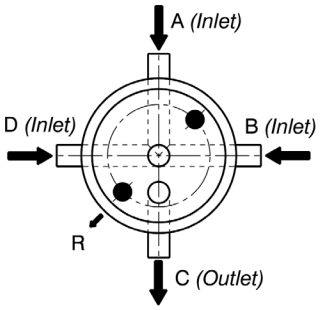

4V11

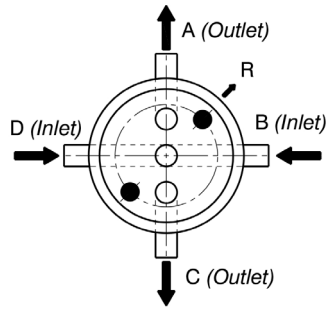

● ➡ Bottom Threaded holes, M4X0.7-6H
R ➡ Sniffing hole position

Other configurations: on demand