Code T1 Electrical Termination Dimensions

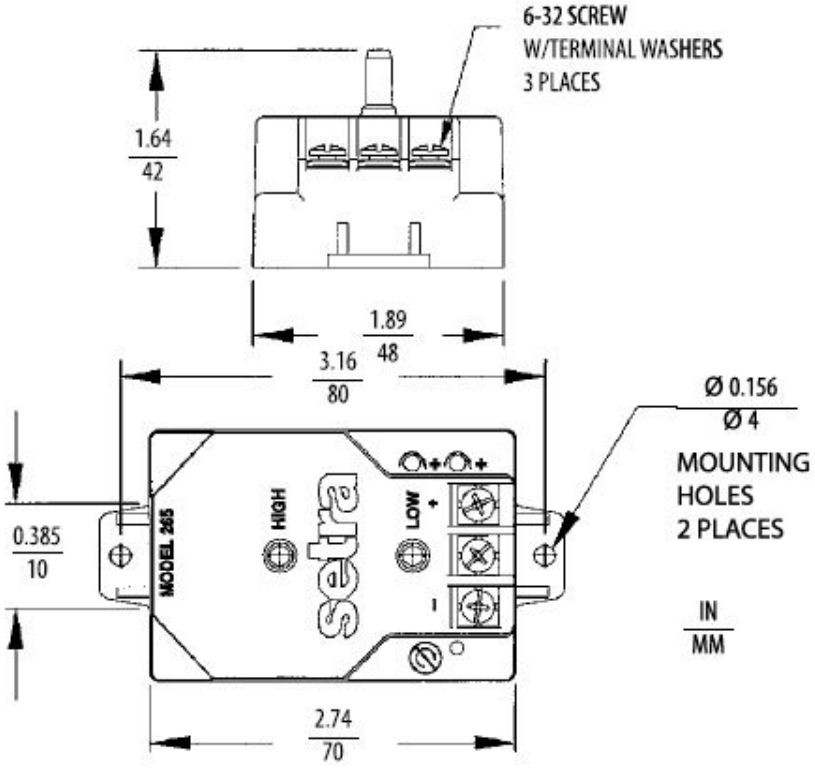

Optional A1 Conduit Electrical
Enclosure Dimensions

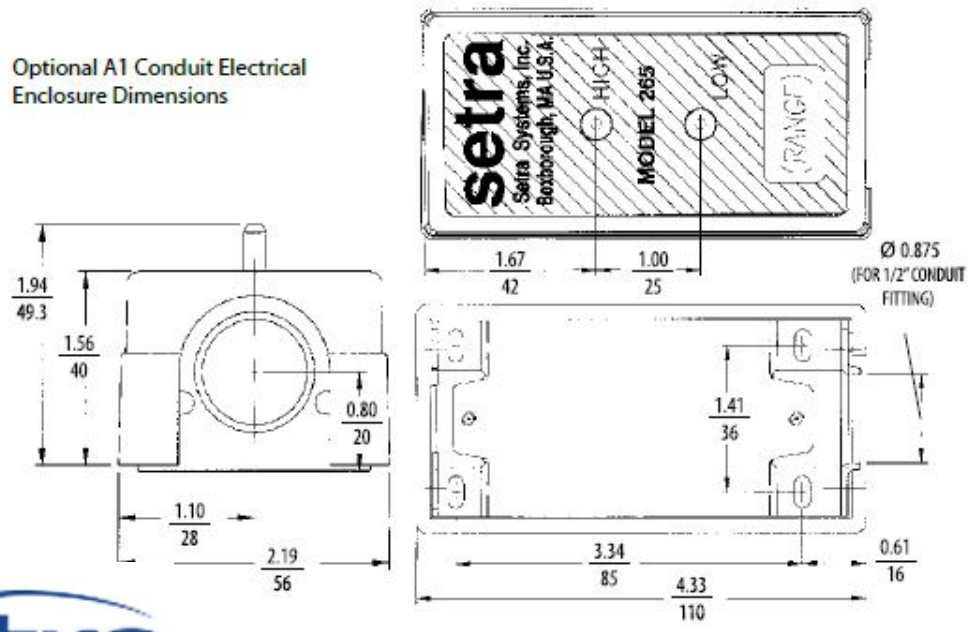

setra

MODEL 265