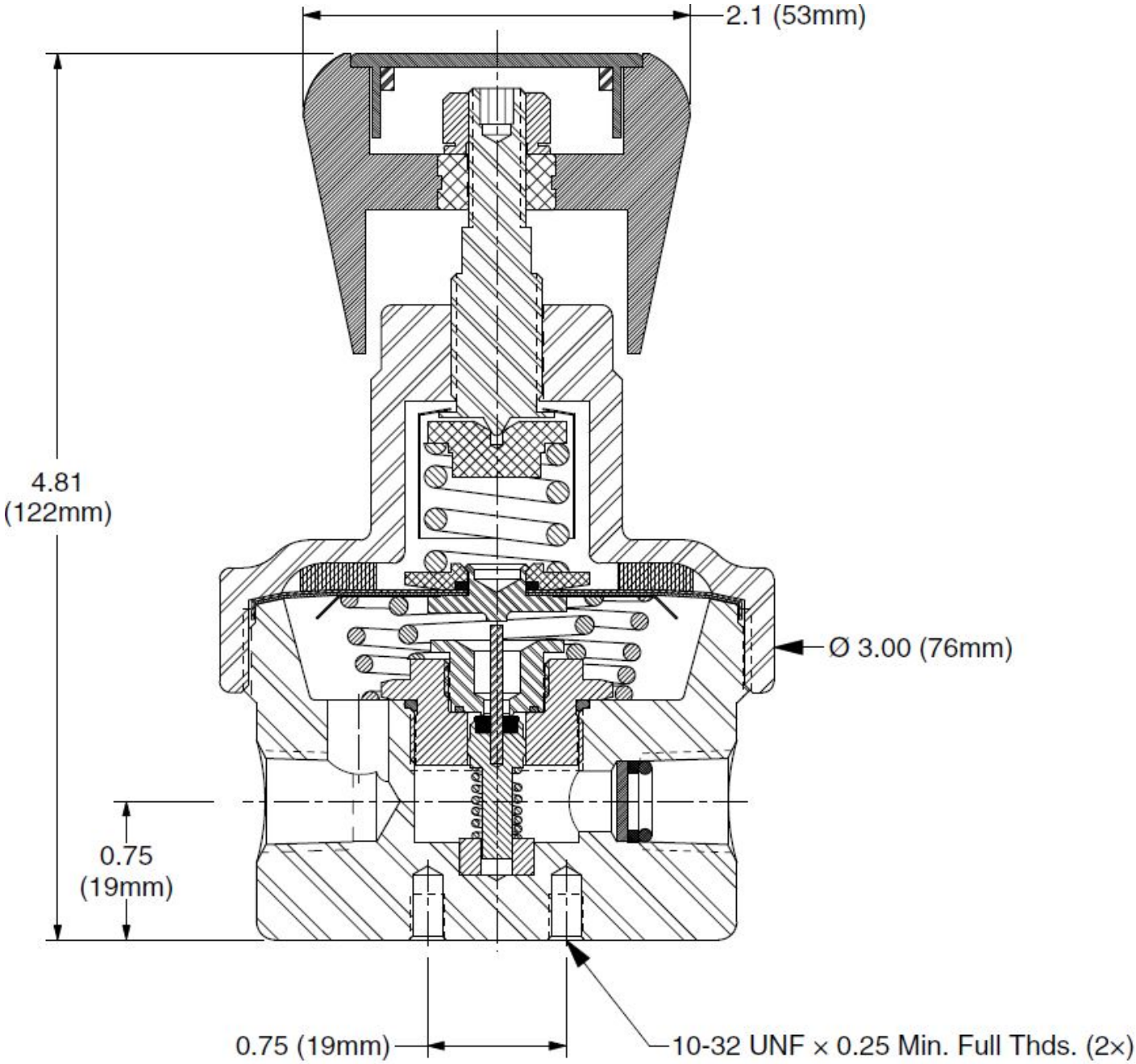
2.1 (53mm)
4.81
(122mm)
Ø 3.00 (76mm)
0.75
(19mm)
0.75 (19mm)
10-32 UNF × 0.25 Min. Full Thds. (2×)